BÄRO
Retail
Lighting

Intara ID

Article number: 50600004

LIGHT TECHNOLOGY

LED	LED
Light colour	927
Luminous flux	2230 lm
System power	23 W
Luminaire Efficiency	97 lm/W
Reflector	OvalBasic
Beam angle	60° x 40°
Controller	On/Off

LUMINAIRE

Rotation angle	350°
Swivel angle	34°
Weight	1.2 kg
Protection rating . class	IP 20 . III
Luminaire colour	black

OPCJA

RAL-colours, NCS-colours (powder coating or wet spraying) on inquiry, surface alloys on inquiry, honeycomb louver

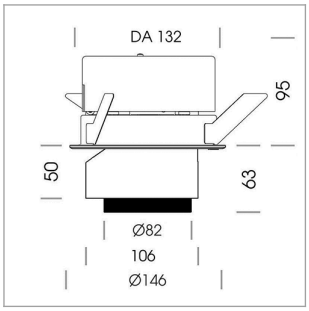

Recessed luminairewith LED, rated life of the LED L80/B10 > 50000 h, colour rendering index CRI > 80, chromaticity tolerance 2 SDCM (initial), 3D silicone lens to reduce the proportion of scattered light, reflector with oval light distribution pattern, reflector pure aluminium 99,99% in MIRO-Silver®, segmented, exchangeable reflector unit in high-sheen black plastic, with glass cover, fitting ring and cover sheet steel, rotation angle 350°, swivel angle 34°, patented swivel-tilt mechanism, luminaire housing die-cast aluminium, powder-coated, black, separate driver unit

76500034 driver unit, On/Off, 220-240 V / 50-60 Hz, 600 mA, camera-compatible, up to 2.5 KV interference resistance, SELV, max. 34 luminaires per circuit (B16A fuse)

76500039 driver unit, DALI, 220-240 V / 50-60 Hz, 600 mA, with GST18/5-pin connector, incl. 5-conductor feed-through wiring, camera-compatible, up to 2.5 KV interference resistance, SELV, max. 24 luminaires per circuit (B16A fuse)

76500122 driver unit, Casambi, 220-240 V / 50-60 Hz, 600 mA, camera-compatible, up to 2.5 KV interference resistance, SELV, max. 23 luminaires per circuit (B16A fuse)
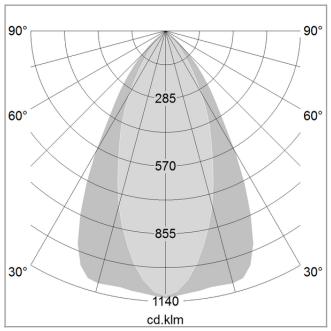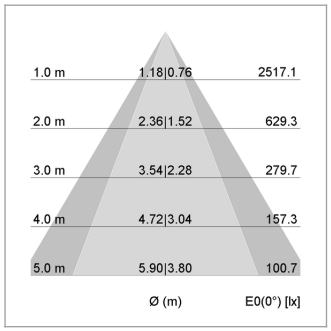
Note: All data are typical values. System features may change with product improvements due to technical advances. Errors excepted.